ENGINEERING

Innovative Electrical Power Solutions

Reclosers for Smart Grid Applications

Jeremy Wood

RWW ENGINEERING

What is a Smart Grid?

- Different electrical generation sources
- Energy storage options
- Equipment used for transmission & distribution
- Measuring & monitoring equipment (meters)
- IED’s used for protection & control
- Communication systems – networks
- Hardware & software used for above

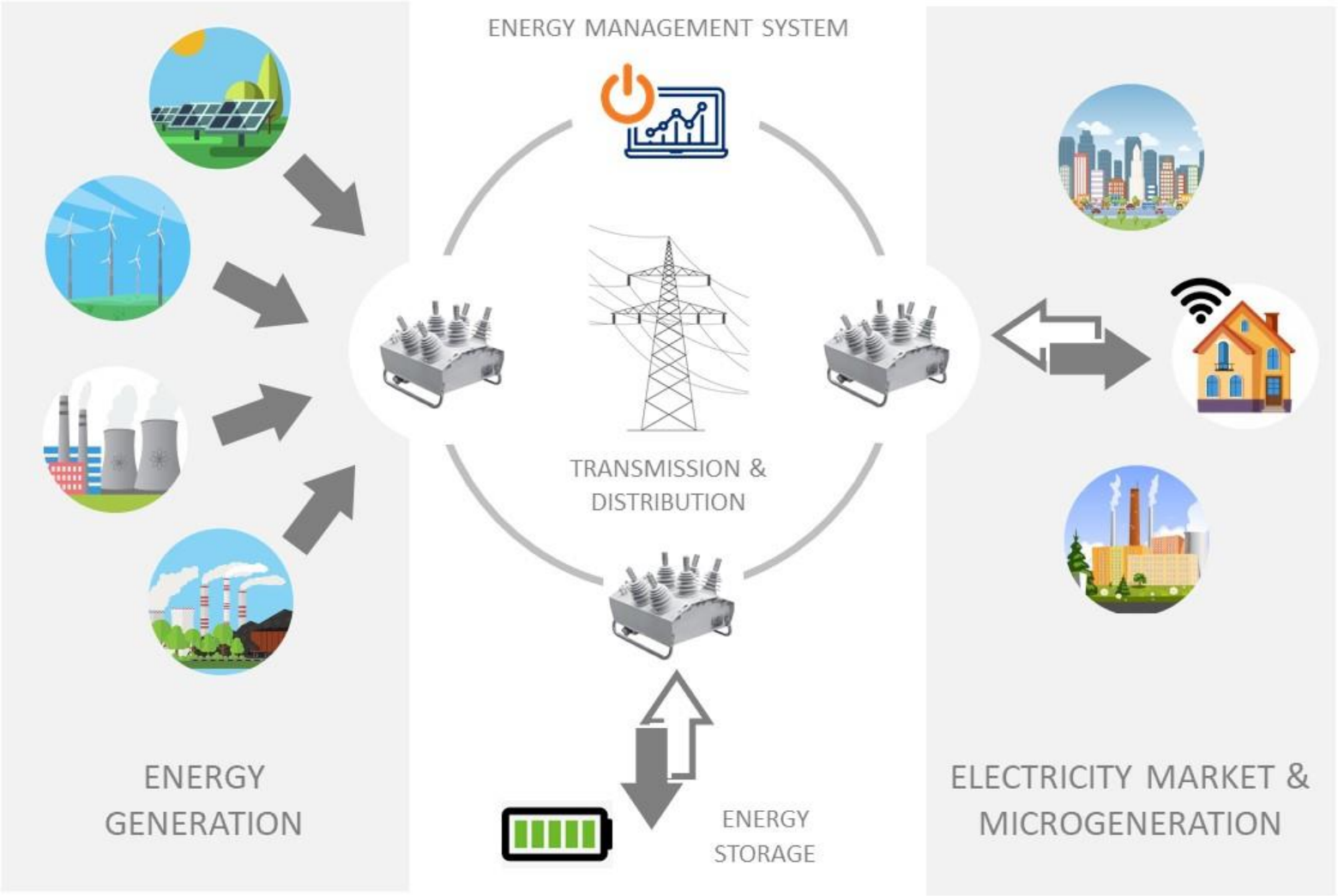
ENERGY MANAGEMENT SYSTEM
TRANSMISSION &
DISTRIBUTION
ENERGY
GENERATION
ENERGY
STORAGE
ELECTRICITY MARKET &
MICROGENERATION

Problems encountered with a Smart Grid

- Multiple sources of generation
- Possible reversal of power flow
- Frequency variation
- Synchronization issues
- Lack of equipment visibility
- Power quality problems

Benefits of a Smart Grid

- Utilities have access to information in real-time
- Energy drawn from various sources
- Energy demand can be managed better
- Power quality issues & outages can be reduced
- Customers can have flexible energy usage options
- Better utilization of existing infrastructure
- Fault detection & self-healing network
- Lower environmental impact
- Reduced operation & maintenance costs
- Increased reliability & revenue

Reclosers used for Smart Grid Applications

OSM Recloser

Recloser system

OSM Recloser

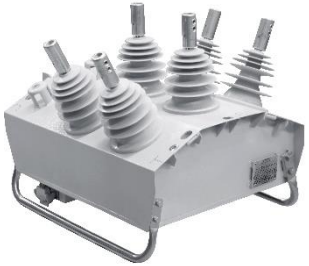

Control Cubicle

Control Cable

Communication

NOJA POWER

Recloser pole mount application

NOJA POWER®

Substation application

NOJA POWER

Main functions of Reclosers used in Smart Grids

- Overhead line distribution
- Fault detection
- Fault Isolation
- Restoration of network via alternative sources
- Measurement of data & logging
- Communicating with central control system
- Cyber security
- Full automation

Key features of a Smart Recloser

- Magnetic actuators – reduced energy to operate required
- Solid dielectric insulation
- No SF6 gas, no maintenance, environmentally friendly
- Measurement of voltage on source & load side
- Reliable electronics design
- Versatile Software
- Various communication protocols
- Smart protection capabilities

Cross sectional view of Recloser

1. Vacuum interrupter
2. Push rod - insulating
3. Actuator
4. Epoxy housing
5. Silicone bushing extension
6. Terminal
7. Tank
8. Auxilary switches

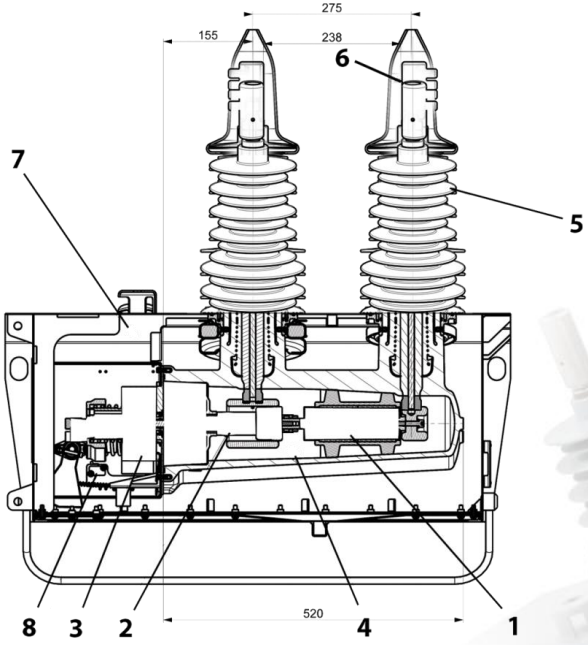

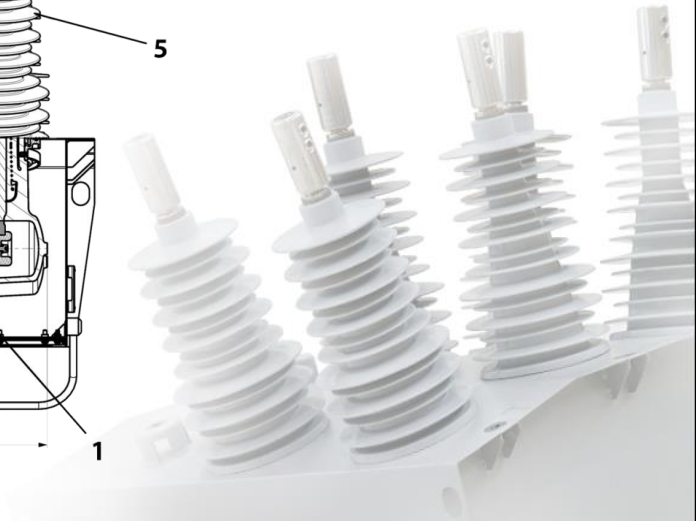

NOJA POWER

Control panel features

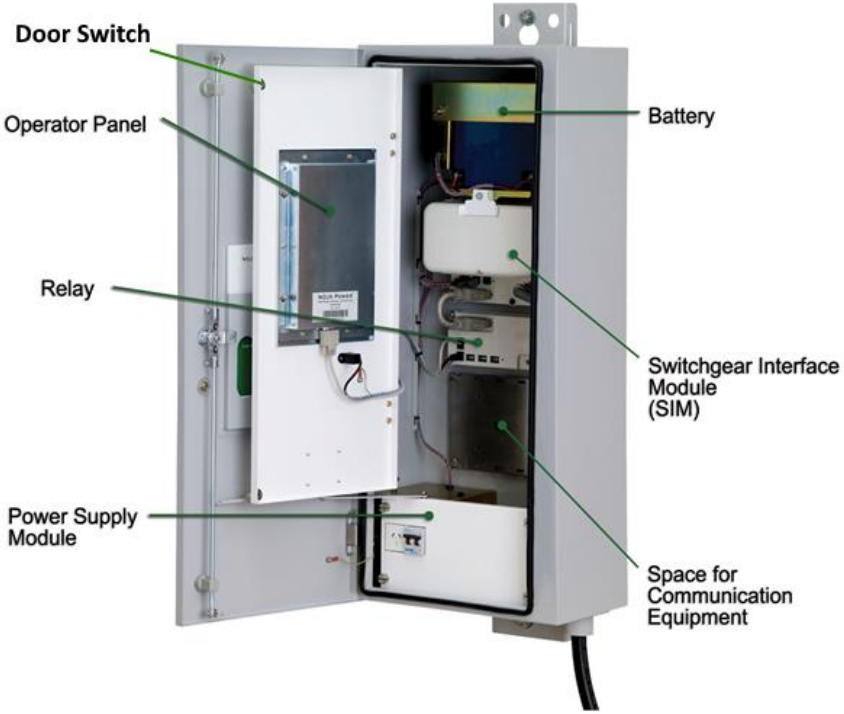

NOJA POWER®

Protection capabilities

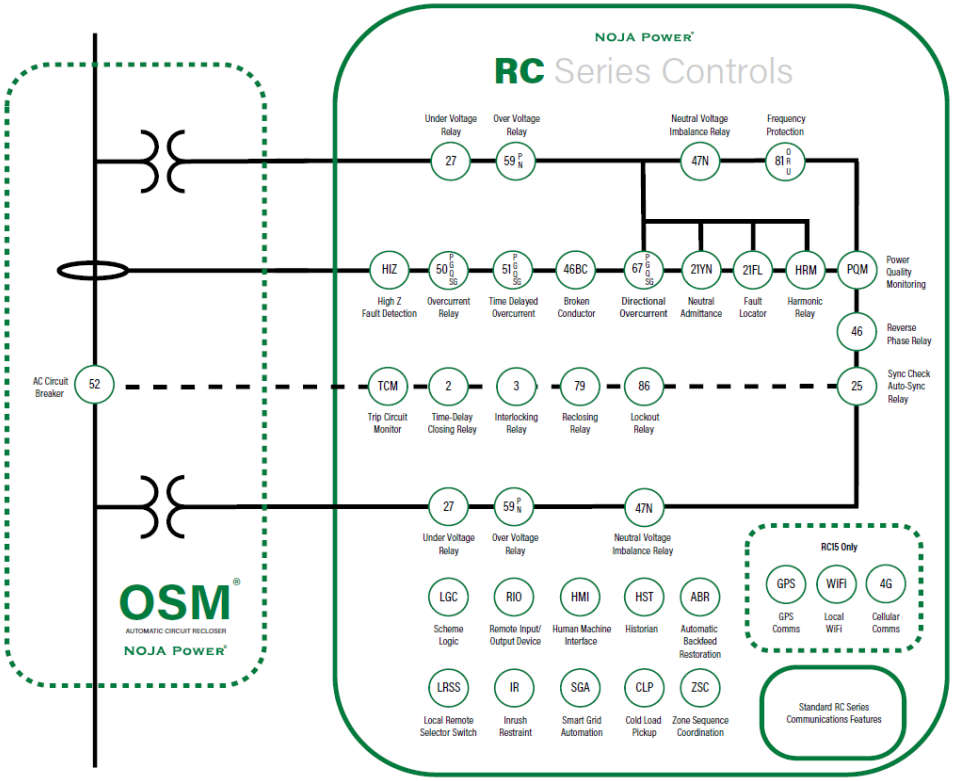

Protection capabilities

- Over voltage / Under voltage
- O/C, E/F, SEF
- Auto Synchronising / Synch check
- Directional protection
- Fault location
- Power quality
- Frequency
- Configurable logic

Smart Software

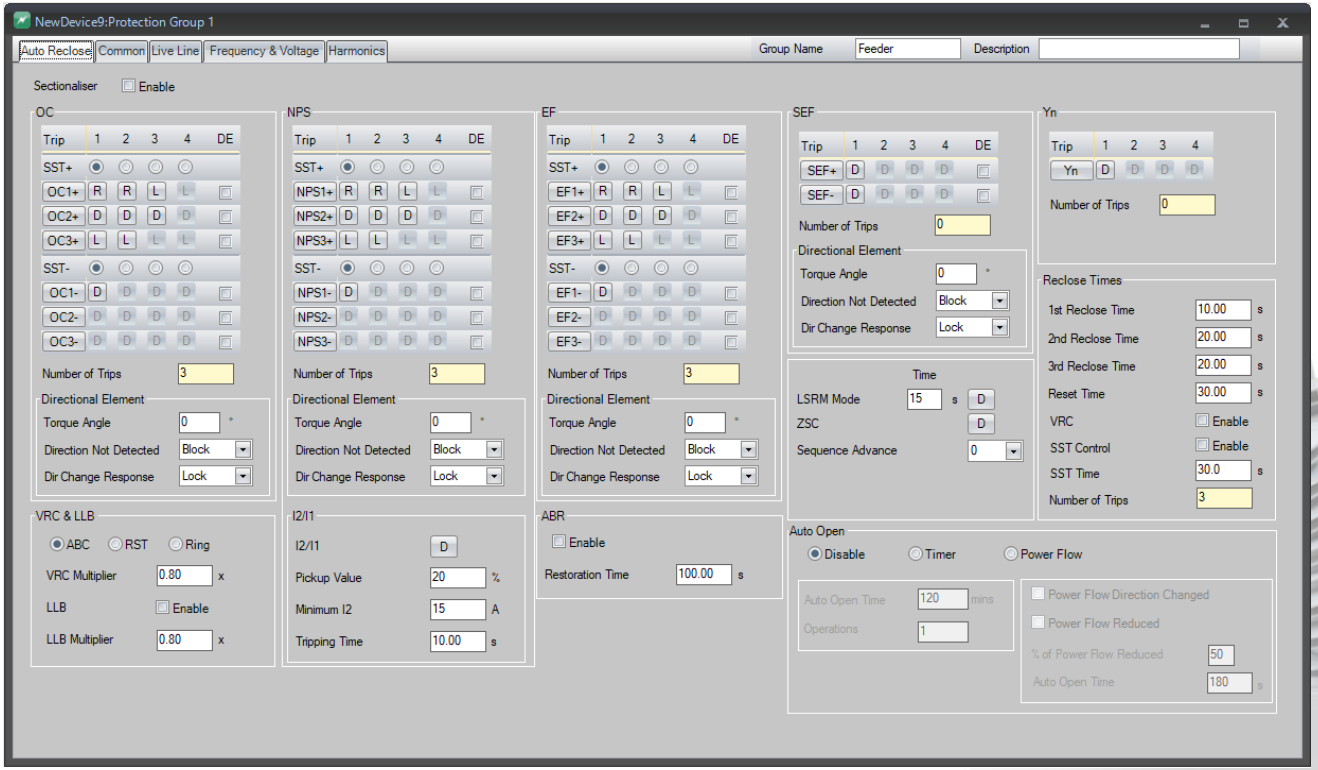

Smart Software

- Comprehensive & user friendly
- General systems settings
- Protection settings
- Communications & protocol settings
- Logic
- I/O setup
- Power quality
- Data logging

Research & development

- Ongoing R&D
- Keeps pace with smart grid development
- Ensures latest technology available

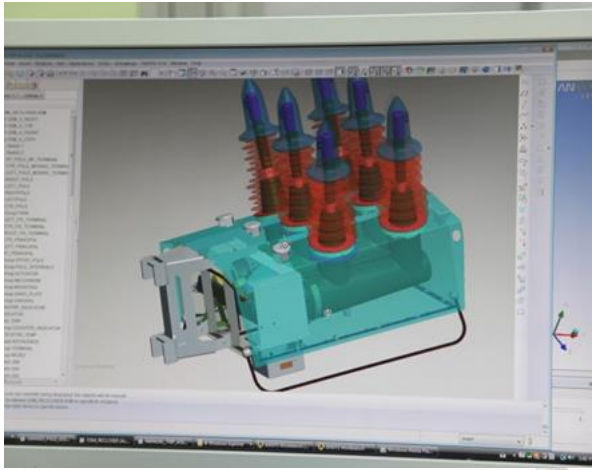

RWW ENGINEERING

NOJA POWER®

Conclusion

- Smart Grids require smart hardware
- Smart Grids require smart software
- Smart Grids require smart communications systems

Benefits include:

- Reduced maintenance costs
- Reduced downtime & outages
- Stable grid under all conditions
- Leads to increased revenue